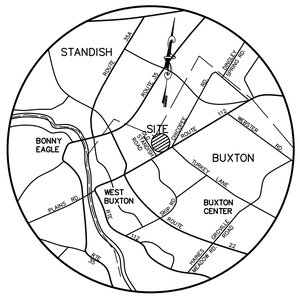

LOCATION MAP
SCALE: 1" = 2 MILES

MAG. 2018

NOTES:

1. OWNER/APPLICANT: BILL HAM, 142 DARBICK TERRACE, HOLLIS, ME 04042
2. ENGINEER: ANDREW MORRELL PE# 13285, BH2M, 380B MAIN STREET, GORHAM, MAINE
3. SURVEYOR: ROBERT C. LIBBY JR. PLS #2190, BH2M
4. DEED REFERENCES: BK. 9713, PG. 122; BK. 16759, PG. 443; BK. 18420, PG. 291
5. TAX MAP REFERENCE: MAP 1, LOT 131 & 132-1; MAP 2, LOT 4
6. ZONING: RESIDENTIAL (RES)
7. AREA OF SUBDIVISION: 485,980 S.F. (11.157 AC.)
8. PROPOSED USE: 3 LOT SUBDIVISION-CONVENTIONAL
9. MINIMUM STANDARDS: MIN. LOT SIZE - 120,000 S.F.; FRONTAGE - 200' MIN.; SETBACKS - 40' FRONT, 30' SIDE AND REAR
10. SEWER SERVICE: INDIVIDUAL ON-SITE SUBSURFACE DISPOSAL SYSTEMS - DESIGNED BY MARK HAMPTON ASSOCIATES
11. WATER SERVICE: PRIVATE WELLS
12. ELEC/TEL/CABLE: OVERHEAD- SERVICES TO EACH LOT FROM OLD STANDISH ROAD
13. TOPOGRAPHY: STATE OF MAINE GIS 2' CONTOURS
14. WETLANDS/TEST PITS/ SEPTIC DESIGN & HIGH INTENSITY SOILS: MARK HAMPTON ASSOCIATES, P.O. BOX 1951, PORTLAND, ME

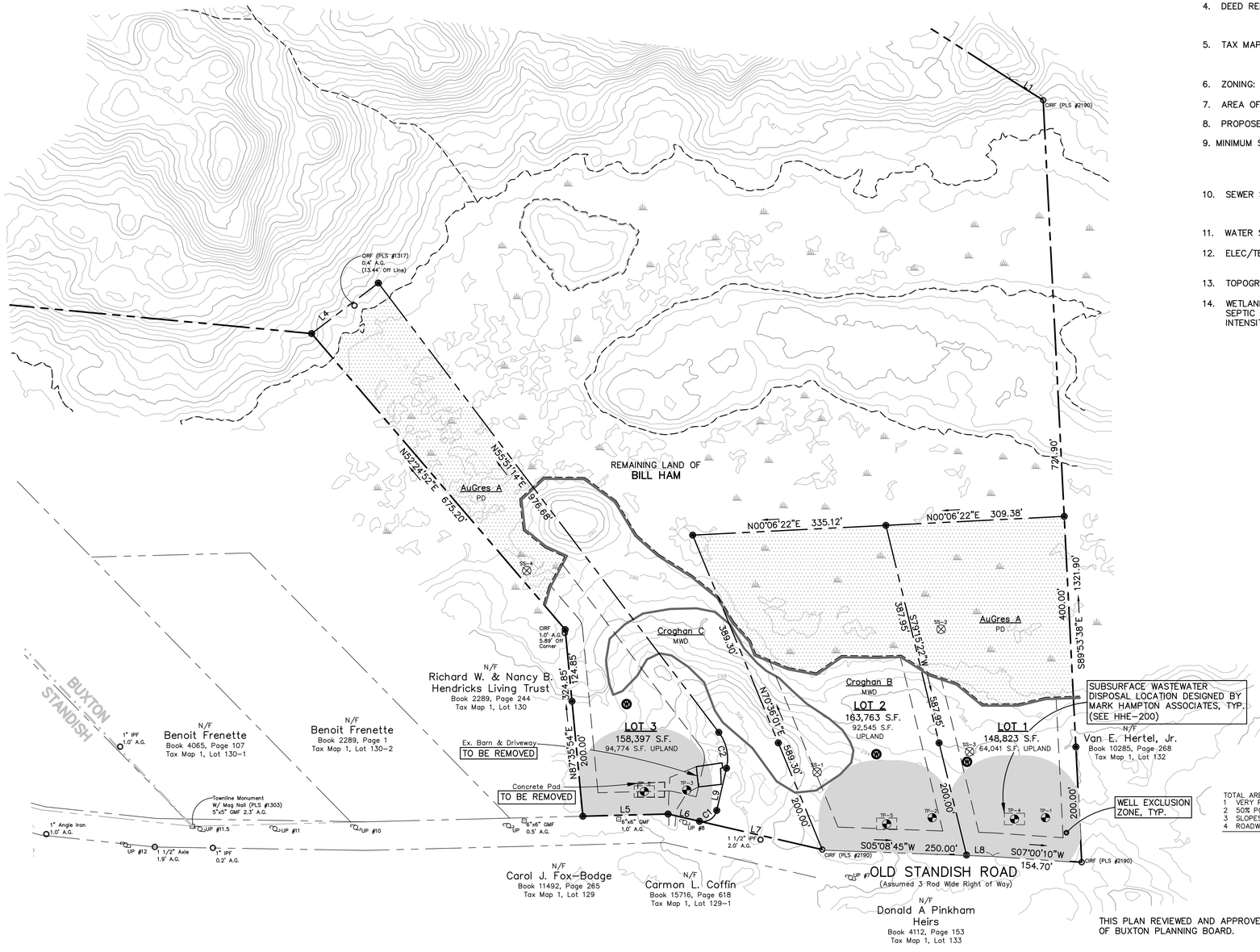

LINE/CURVE DATA

L1	N35°13'04"E	66.05'	
L2	N27°38'32"W	102.62'	
L3	N29°30'32"W	87.01'	
L4	N34°08'46"W	145.06'	
L5	S01°30'52"W	147.70'	
L6	N15°59'58"E	55.75'	
L7	S15°59'58"W	218.45'	
L8	S05°08'45"W	45.30'	
L9	S74°00'02"E	75.00'	
C1	R=25.00',	L=39.27'	
C2	R=75.00',	L=65.64'	

LEGEND

SYMBOL	DESCRIPTION
⊡GMF	GRANITE MONUMENT FOUND
○IPF/IRF	IRON PIPE/IRON ROD FOUND
○CIRF	CAPPED IRON ROD FOUND
●	5/8" IRON ROD TO BE SET
	UTILITY POLE
	LIMIT OF WETLANDS
	PROPERTY LINE
	ABUTTER PROPERTY LINE
	EDGE OF PAVEMENT
	EASEMENT LINE
A.G.	ABOVE GROUND
N/F	NOW OR FORMERLY
TP	TEST PIT
SS	SOIL TEST PIT
W	PROPOSED WELL

SOIL LEGEND

SYMBOL	DESCRIPTION
	SOIL BOUNDARY LINES

SLOPE DESIGNATION
A = 0 - 3%
B = 3- 8%
C = 8 - 20%
D = 20%+

HYDROLOGIC SOIL GROUP

SOIL	GROUP
CROGHAN	B
AU GRES	C

Scale: 1" = 100'
100' 0 100' 100'

BUXTON
NET RESIDENTIAL DENSITY CALCULATION

TOTAL AREA - SUBDIVISION		470,983 S.F.
1 VERY POORLY DRAINED SOILS		0 S.F.
2 50% POORLY DRAINED SOILS	219,624 S.F. * 50% =	109,812 S.F.
3 SLOPES > 20%		0 S.F.
4 ROADWAYS		0 S.F.
NET AREA		361,171 S.F.

SPACE STANDARD FOR RURAL ZONE
MINIMUM DENSITY - 120,000 S.F./LOT
NET RESIDENTIAL DENSITY: 361,171 S.F. / 120,000 S.F. = 3.009 LOTS
NUMBER OF PROPOSED LOTS = 3

THIS PLAN REVIEWED AND APPROVED BY THE TOWN OF BUXTON PLANNING BOARD.

DATE

YORK,ss REGISTRY OF DEEDS
Received _____
at _____h _____m _____M., and
Filed In Plan Book _____ Page _____
ATTEST:

Register

I CERTIFY THAT THIS SURVEY CONFORMS TO THE MAINE BOARD OF LICENSURE FOR PROFESSIONAL LAND SURVEYORS TECHNICAL STANDARDS OF PRACTICE FOR A STANDARD BOUNDARY SURVEY WITH THE FOLLOWING EXCEPTIONS:

1. NO SURVEYORS REPORT

STATE OF MAINE ROBERT C. LIBBY JR. 2190 REGISTERED PROFESSIONAL LAND SURVEYOR

ROBERT C. LIBBY JR. PLS #2190

NO.	DATE	REVISION DESCRIPTION
1	9/29/21	Submitted Preliminary Subdivision to Town

BH2M
Berry, Huff, McDonald, Milligan Inc.
Engineers, Surveyors
380B Main Street, Gorham, Maine 04038
Tel. (207) 839-2771
www.bh2m.com

FOR
Bill Ham
142 Darbick Terrace
Hollis, Maine

SUBDIVISION PLAN
OLD STANDISH ROAD SUBDIVISION
OLD STANDISH ROAD
BUXTON, MAINE

DESIGNED	DATE
A. Morrell	Sept. 2021
DRAWN	SCALE
T. Taggett	1" = 100'
CHECKED	JOB. NO.
R. Libby, Jr.	20179

SHEET
1

REPRODUCTION OR REUSE OF THIS DOCUMENT WITHOUT THE EXPRESSED WRITTEN CONSENT OF BH2M INC. IS PROHIBITED

G:\2020\JOB\PLOdwf-100.dwg, 9/ 29/ 2021 12:55:46 PM

EROSION AND SEDIMENT CONTROL PLAN

THIS PLAN HAS BEEN DEVELOPED AS A STRATEGY TO CONTROL SOIL EROSION AND SEDIMENTATION DURING AND AFTER CONSTRUCTION. THIS PLAN IS BASED ON THE STANDARDS AND SPECIFICATIONS FOR EROSION PREVENTION IN DEVELOPING AREAS AS CONTAINED IN THE LATEST REVISION OF TO THE 2016 MAINE EROSION AND SEDIMENT CONTROL BMP'S MANUAL FOR DESIGNERS AND ENGINEERS, AND THE LATEST REVISION TO THE 2014 MAINE EROSION AND SEDIMENT CONTROL FIELD GUIDE FOR CONTRACTORS. SEE MANUALS FOR ADDITIONAL INFORMATION AND DETAILS.

DURING CONSTRUCTION THE DEVELOPER/APPLICANT OR THEIR REPRESENTATIVES WILL BE RESPONSIBLE FOR IMPLEMENTING THE EROSION AND SEDIMENT CONTROL BMP'S AS WELL ROUTINE INSPECTIONS AND MAINTENANCE OF THE BMP'S.

THE PROPOSED LOCATIONS OF SILTATION AND EROSION CONTROL STRUCTURES ARE SHOWN ON THE SITE PLAN.

1. ALL CONSTRUCTION INSPECTIONS SHALL BE CONDUCTED BY SOMEONE WITH KNOWLEDGE OF EROSION AND STORMWATER CONTROL, INCLUDING STANDARDS AND PERMIT CONDITIONS. CONSTRUCTION INSPECTIONS SHALL BE PERFORMED AT LEAST ONCE A WEEK, AND PRIOR TO AND 24 HOURS AFTER A WET WEATHER EVENT (1 INCH OR MORE IN A 24 HOUR PERIOD). CONSTRUCTION INSPECTION AND CORRECTIVE ACTION DOCUMENTATION RECORDS SHALL BE MAINTAINED FOR A MINIMUM OF 5 YEARS.
2. THE SCOPE OF CONSTRUCTION INSPECTIONS INCLUDE THE EROSION AND SEDIMENTATION CONTROL MEASURES AS WELL AS DISTURBED AREAS, MATERIAL STORAGE AREAS, AND LOCATIONS WHERE VEHICLES ENTER AND EXIT THE SITE.
3. ALL SEDIMENT AND EROSION CONTROL MEASURES SHALL BE DONE IN ACCORDANCE WITH THE "MAINE EROSION AND SEDIMENT CONTROL BMP'S", DEPARTMENT OF ENVIRONMENTAL PROTECTION, LATEST REVISION.
4. THOSE AREAS UNDERGOING ACTUAL CONSTRUCTION WILL BE LEFT IN AN UNTREATED OR UNVEGETATED CONDITION FOR A MINIMUM TIME. AREAS SHALL BE PERMANENTLY STABILIZED WITHIN 7 DAYS OF FINAL GRADING AND TEMPORARILY STABILIZED WITHIN 7 DAYS OF INITIAL DISTURBANCE OF THE SOIL. IF THE DISTURBANCE IS WITHIN 75 FEET OF A WETLAND OR WATERBODY, THE AREA SHALL BE STABILIZED WITHIN 2 DAYS OR PRIOR TO ANY STORM EVENT, WHICHEVER COMES FIRST.
5. EXCAVATION AND EARTHWORK SHALL BE DONE SUCH THAT NO MORE THAN 1 ACRES OF THE SITE IS WITHOUT STABILIZATION AT ANY ONE TIME.
6. EXPOSED AREA SHOULD BE LIMITED TO THAT WHICH CAN BE MULCHED IN ONE DAY.
7. CONTINUATION OF EARTHWORK OPERATIONS ON ADDITIONAL AREAS SHALL NOT BEGIN UNTIL THE EXPOSED SOIL SURFACE ON THE AREA BEING WORKED HAS BEEN STABILIZED SUCH THAT NO MORE THAN ONE ACRE OF THE SITE IS WITHOUT EROSION CONTROL PROTECTION.
8. SEDIMENT BARRIERS (EROSION CONTROL MIX, STONE CHECK DAMS, STABILIZED CONSTRUCTION ENTRANCE, ETC.) SHOULD BE INSTALLED PRIOR TO ANY SOIL DISTURBANCE OF THE CONTRIBUTING DRAINAGE AREA ABOVE THEM. THE CONTRACTOR SHALL MAINTAIN THE STABILIZED CONSTRUCTION ENTRANCE UNTIL ALL DISTURBED AREAS ARE STABILIZED.
9. INSTALL EROSION CONTROL MIX AT TOE OF SLOPES TO FILTER SILT FROM RUNOFF. SEE E.C. MIX DETAIL FOR PROPER INSTALLATION. EROSION CONTROL MIX WILL REMAIN IN PLACE PER NOTE #7. THE USE OF AN EROSION CONTROL MIX BERM IS PROHIBITED AT THE BASE OF SLOPES STEEPER THAN 8% OR WHERE THERE IS FLOWING WATER.
10. ALL ERSOION CONTROL STRUCTURES WILL BE INSPECTED, REPLACED, AND/OR REPAIRED EVERY 7 DAYS AND IMMEDIATELY BEFORE AND FOLLOWING ANY SIGNIFICANT RAINFALL (0.5 INCH OR MORE IN A 24-HOUR PERIOD) OR SNOW MELT OR WHEN NO LONGER SERVICEABLE DUE TO SEDIMENT ACCUMULATION OR DECOMPOSURE. IF AN INSPECTION DETERMINES THAT A CORRECTIVE ACTION IS REQUIRED, THE ACTION OR REPAIR SHALL BE STARTED BY THE END OF THE NEXT WORKDAY AND COMPLETED WITHIN SEVEN DAYS OR BEFORE THE NEXT STORM EVENT. SEDIMENT DEPOSITS SHOULD BE REMOVED AFTER EACH STORM EVENT. THEY MUST BE REMOVED WHEN DEPOSITS REACH APPROXIMATELY ONE HALF THE HEIGHT OF THE BARRIER. SEDIMENT CONTROL DEVICES SHALL REMAIN IN PLACE AND BE MAINTAINED BY THE CONTRACTOR UNTIL AREAS UPSLOPE ARE STABILIZED BY TURF. EROSION CONTROL MEASURES SHALL BE REMOVED WITHIN 30 DAYS OF PERMANENT STABILIZATION. PERMANENT STABILIZATION IS 90% GRASS CATCH IN VEGETATED AREAS.
11. NO SLOPES, EITHER PERMANENT OR TEMPORARY, SHALL BE STEEPER THAN ONE AND ONE HALF TO ONE (1.5 TO 1).
12. IF FINAL SEEDING OF THE DISTURBED AREAS IS NOT COMPLETED 45 DAYS PRIOR TO THE FIRST KILLING FROST, USE TEMPORARY MULCHING (DORMANT SEEDING MAY BE ATTEMPTED AS WELL) TO PROTECT THE SITE AND DELAY SEEDING UNTIL THE NEXT RECOMMENDED SEEDING PERIOD.
13. TEMPORARY SEEDING OF DISTURBED AREAS THAT HAVE NOT BEEN FINAL GRADED SHALL BE COMPLETED BY AUG. 15 OR 45 DAYS PRIOR TO THE FIRST KILLING FROST (OCT. 1) TO PROTECT FROM SPRING RUNOFF PROBLEMS.
14. DURING THE CONSTRUCTION PHASE, INTERCEPTED SEDIMENT WILL BE RETURNED TO THE SITE AND REGRADED ONTO OPEN AREAS. POST SEEDING SEDIMENT, IF ANY WILL BE DISPOSED OF IN AN ACCEPTABLE MANNER.
15. REVEGETATION MEASURES WILL COMMENCE UPON COMPLETION OF CONSTRUCTION EXCEPT AS NOTED ABOVE. ALL DISTURBED AREAS NOT OTHERWISE STABILIZED WILL BE GRADED, SMOOTHED, AND PREPARED FOR FINAL SEEDING AS FOLLOWS:
    a. FOUR INCHES OF LOAM WILL BE SPREAD OVER DISTURBED AREAS AND SMOOTHED TO A UNIFORM SURFACE.
    b. APPLY LIMESTONE AND FERTILIZER ACCORDING TO SOIL TEST. IF SOIL TESTING IS NOT FEASIBLE ON SMALL OR VARIABLE SITES, OR WHERE TIMING IS CRITICAL, FERTILIZER MAY BE APPLIED AT THE RATE OF 800 POUNDS PER ACRE OR 18.4 POUNDS PER 1,000 SQUARE FEET USING 10-20-20 (N-P205-K20) OR EQUIVALENT. APPLY GROUND LIMESTONE (EQUIVALENT TO 50% CALCIUM PLUS MAGNESIUM OXIDE) AT A RATE OF 3 TONS PER ACRE (138 LB PER 1,000 SQ. FT.).
    c. FOLLOWING SEED BED PREPARATION, DITCHES AND BACK SLOPES WILL BE SEEDED TO A MIXTURE OF 47% CREEPING RED FESCUE, 5% REDTOP, AND 48% TALL FESCUE. THE LAWN AREAS WILL BE SEEDED TO A PREMIUM TURF MIXTURE OF 44% KENTUCKY BLUEGRASS, 44% CREEPING RED FESCUE, AND 12% PERENNIAL RYEGRASS: SEEDING RATE IS 1.03 LBS PER 1000 SQ. FT. LAWN QUALITY SOD MAY BE SUBSTITUTED FOR SEED. SEED MIX SHALL CONTAIN 10% ANNUAL RYE GRASS.
    d. HAY MULCH AT THE RATE OF 70-90 LBS PER 1000 SQUARE FEET FOR OVER 75% COVERAGE. FOR UNPROTECTED OR WINDY AREAS, ANCHOR MULCH WITH PEG AND TWINE (1 SQ. YD./BLOCK). HYDRAULIC MULCHES MAY ALSO BE USED, APPLIED AT A RATE OF 5 LBS PER 1000 SQUARE FEET FOR PAPER MULCH OR 40 LBS PER 1000 SQUARE FEET OR AS DIRECTED BY THE MANUFACTURER. ON SLOPES GREATER THAN 3:1 EROSION CONTROL MIX MAY BE USED, SEE EROSION CONTROL MIX NOTES BELOW.
    e. FOR DISTURBED AREAS TO BE MAINTAINED IN POST-CONSTRUCTION AS A MEADOW BUFFER, APPLY NEW ENGLAND CONSERVATION WILDLIFE MIX BY NEW ENGLAND WETLAND PLANTS, INC., OF AMHERST, MASSACHUSETTS OR APPROVED EQUAL.
14. ALL TEMPORARY EROSION CONTROL MEASURES SHALL BE REMOVED WITHIN 30 DAYS ONCE THE SITE IS STABILIZED WITH 90% GRASS CATCH IN VEGETATED AREAS. TEMPORARY EROSION AND SEDIMENT CONTROL BLANKET SHALL BE USED IN ALL DITCHES AND SWALES AS SHOWN IN DETAILS.
15. WETLANDS WILL BE PROTECTED WITH EROSION CONTROL MIX OR SILT FENCE INSTALLED AT THE EDGE FOR THE WETLAND OR THE BOUNDARY OF WETLAND DISTURBANCE. ALL AREAS WITHIN 75 FEET OF A PROTECTED NATURAL RESOURCE MUST BE PROTECTED WITH A DOUBLE ROW OF SEDIMENT BARRIERS DURING WINTER CONSTRUCTION.
16. ALL STORMWATER WILL BE PREVENTED FROM RUNNING ONTO STOCKPILES. SEDIMENT BARRIERS WILL BE INSTALLED DOWNGRADIENT OF ALL STOCKPILES.
17. PERMANENT POST-CONSTRUCTION BMP'S (VEGETATED SWALES, WET PONDS, ETC.) WILL NOT BE USED TO MANAGE FLOWS DURING CONSTRUCTION WITHOUT SPECIAL PROTECTION AND/OR RESTORATION.

ADDITIONAL TEMPORARY SEED MIXTURE (FOR PERIODS LESS THAN 12 MONTHS):

SEASON	SEED	RATE
SUMMER (5/15 – 8/15)	SUDANGRASS	40 LBS/ACRE
	OATS	80 LBS/ACRE
LATE SUMMER/EARLY FALL (8/15 – 9/15)	PERENNIAL RYEGRASS	40 LBS/ACRE
FALL (9/15 – 11/1)	WINTER RYE	112 LBS/ACRE
WINTER (11/1 – 4/1)	MULCH W/ DORMANT SEED	80 LBS/ACRE**
SPRING (4/1 – 7/1)	OATS	80 LBS/ACRE
	ANNUAL RYEGRASS	40 LBS/ACRE

**SEED RATE ONLY

EROSION CONTROL MIX

EROSION CONTROL MIX (ECM) SHALL MEET THE REQUIREMENTS PROVIDED IN THE LATEST REVISION OF MAINE DEP'S EROSION AND SEDIMENTATION CONTROL BMP MANUAL. ECM IS ACCEPTABLE FOR USE ON SLOPES OF GREATER THAN 3:1 BUT LESS THAN 2:1. ECM SHALL CONSIST OF WELL-GRADED ORGANIC COMPONENT 50 – 100% OF DRY WEIGHT, AND COMPRISED OF FIBROUS AND ELONGATED FRAGMENTS. ECM SHALL BE FREE FROM REFUSE, MATERIAL TOXIC TO PLANT GROWTH OR CONSTRUCTION DEBRIS. ECM SHALL BE EVENLY DISTRIBUTED AND APPLIED AT A THICKNESS OF 2" ON 3:1 SLOPES, WITH AN ADDITIONAL 1/2" PER 20' OF SLOPE FOR A MAXIMUM OF 100' IN LENGTH. SLOPES GREATER THAN 3:1, ECM SHALL BE APPLIED AT THICKNESS OF 4" OR 5" FOR SLOPES GREATER THAN 60' IN LENGTH.

NO SLOPES, EITHER PERMANENT OR TEMPORARY, SHALL BE STEEPER THAN ONE AND ONE HALF TO ONE (1.5:1). EROSION CONTROL MIX IS AN ACCEPTABLE STABILIZATION MEASURE FOR SLOPES UP TO 3:1, WITH LIMITS THAT ARE COVERED BY NOTES ON THIS SHEET. SLOPES BETWEEN 3:1 AND 2:1 SHALL BE STABILIZED WITH EROSION CONTROL BLANKETS, AND ALL SLOPES GREATER THAN 2:1 SHALL BE STABILIZED WITH RIPRAP. SEE SLOPE STABILIZATION DETAIL FOR ADDITIONAL INFORMATION.

EROSION CONTROL DURING CONSTRUCTION

WINTER CONSTRUCTION

1. WINTER CONSTRUCTION PERIOD: NOVEMBER 1 THROUGH APRIL 15
2. OVERWINTER STABILIZATION OF DITCHES AND CHANNELS:
   ALL STONE-LINED DITCHES AND CHANNELS MUST BE CONSTRUCTED AND STABILIZED BY NOVEMBER 15. ALL GRASS LINED DITCHES AND CHANNELS MUST BE CONSTRUCTED AND STABILIZED BY SEPTEMBER 1. IF A DITCH OR CHANNEL IS NOT GRASS-LINED BY SEPTEMBER 1, THEN ONE OF THE FOLLOWING ACTIONS MUST BE TAKEN TO STABILIZE THE DITCH FOR LATE FALL AND WINTER.
   A. INSTALL A SOD LINING IN THE DITCH:
      A DITCH MUST BE LINED WITH PROPERLY INSTALLED SOD BY OCTOBER 1. PROPER INSTALLATION INCLUDES: PINNING THE SOD ONTO THE SOIL WITH WIRE PINS, ROLLING THE SOD TO GUARANTEE CONTACT BETWEEN THE SOD AND UNDERLYING SOIL, WATERING THE SOD TO PROMOTE ROOT GROWTH INTO THE DISTURBED SOIL, AND ANCHORING SOD AT THE BASE OF THE DITCH WITH JUTE OR PLASTIC MESH TO PREVENT THE SOD FROM SLOUGHING DURING FLOW CONDITIONS. SEE THE PERMANENT VEGETATION BMP SECTION.
   B. INSTALL A STONE LINING IN THE DITCH:
      A DITCH MUST BE LINED WITH STONE RIPRAP BY NOVEMBER 15. A REGISTERED PROFESSIONAL ENGINEER MUST BE HIRED TO DETERMINE THE STONE SIZE AND LINING THICKNESS NEEDED TO WITHSTAND THE ANTICIPATED FLOW VELOCITIES AND FLOW DEPTHS WITHIN THE DITCH. IF NECESSARY, THE CONTRACTOR WILL REGRADE THE DITCH PRIOR TO PLACING THE STONE LINING SO TO PREVENT THE STONE LINING FROM REDUCING THE DITCH'S CROSS-SECTIONAL AREA.
3. OVERWINTER STABILIZATION OF DISTURBED SLOPES:
   ALL STONE-COVERED SLOPES MUST BE CONSTRUCTED AND STABILIZED BY NOVEMBER 15. ALL SLOPES TO BE VEGETATED MUST BE SEEDED AND MULCHED BY SEPTEMBER 1. THE DEPARTMENT WILL CONSIDER ANY AREA HAVING A GRADE GREATER THAN 15% TO BE A SLOPE. IF A SLOPE TO BE VEGETATED IS NOT STABILIZED BY SEPTEMBER 1, THEN ONE OF THE FOLLOWING ACTIONS MUST BE TAKEN TO STABILIZE THE SLOPE FOR LATE FALL AND WINTER. STABILIZE THE SOIL WITH TEMPORARY VEGETATION AND EROSION CONTROL MATS. BY OCTOBER 1 THE DISTURBED SLOPE MUST BE SEEDED WITH WINTER RYE AT A SEEDING RATE OF 3 POUNDS PER 1000 SQUARE FEET AND THEN INSTALL EROSION CONTROL MATS OR ANCHORED MULCH OVER THE SEEDING. IF THE RYE FAILS TO GROW AT LEAST THREE INCHES OR FAILS TO COVER AT LEAST 75% OF THE SLOPE BY NOVEMBER 1, THEN THE CONTRACTOR WILL COVER THE SLOPE WITH A LAYER OF EROSION CONTROL MIX OR WITH STONE RIPRAP AS DESCRIBED IN THE FOLLOWING STANDARDS.
   A. STABILIZE THE SOIL WITH SOD:
      THE DISTURBED SLOPE MUST BE STABILIZED WITH PROPERLY INSTALLED SOD BY OCTOBER 1. PROPER INSTALLATION INCLUDES THE CONTRACTOR PINNING THE SOD ONTO THE SLOPE WITH WIRE PINS, ROLLING THE SOD TO GUARANTEE CONTACT BETWEEN THE SOD AND UNDERLYING SOIL, AND WATERING THE SOD TO PROMOTE ROOT GROWTH INTO THE DISTURBED SOIL. THE CONTRACTOR WILL NOT USE LATE SEASON SOD INSTALLATION TO STABILIZE SLOPES HAVING A GRADE GREATER THAN 33% (3H:1V) OR HAVING GROUNDWATER SEEPS ON THE SLOPE FACE.
   B. STABILIZE THE SOIL WITH EROSION CONTROL MIX:
      EROSION CONTROL MIX MUST BE PROPERLY INSTALLED BY NOVEMBER 15. THE CONTRACTOR WILL NOT USE EROSION CONTROL MIX TO STABILIZE SLOPES HAVING GREATER THAN 50% (2H:1V) OR HAVING GROUNDWATER SEEPS ON THE SLOPE FACE. SEE THE EROSION CONTROL MIX NOTES FOR ADDITIONAL CRITERIA.
   C. STABILIZE THE SOIL WITH STONE RIPRAP:
      PLACE A LAYER OF STONE RIPRAP ON THE SLOPE BY NOVEMBER 15. THE DEVELOPMENT'S OWNER WILL HIRE A REGISTERED PROFESSIONAL ENGINEER TO DETERMINE THE STONE SIZE NEEDED FOR STABILITY ON THE SLOPE AND TO DESIGN A FILTER LAYER FOR UNDERNEATH THE RIPRAP.
4. OVERWINTER STABILIZATION OF DISTURBED SOILS:
   BY SEPTEMBER 15, ALL DISTURBED SOILS ON AREAS HAVING A SLOPE LESS THAN 15% MUST BE SEEDED AND MULCHED. IF THE DISTURBED AREAS ARE NOT STABILIZED BY THIS DATE, THEN ONE OF THE FOLLOWING ACTIONS MUST BE TAKEN TO STABILIZE THE SOIL FOR LATE FALL AND WINTER.
   A. STABILIZE THE SOIL WITH TEMPORARY VEGETATION:
      BY OCTOBER 1, SEED THE DISTURBED SOIL WITH WINTER RYE AT A SEEDING RATE OF 3 POUNDS PER 1000 SQUARE FEET, LIGHTLY MULCH THE SEEDED SOIL WITH HAY OR STRAW AT 75 POUNDS PER 1000 SQUARE FEET, AND ANCHOR THE MULCH WITH PLASTIC NETTING. MONITOR GROWTH OF THE RYE. IF THE RYE FAILS TO GROW AT LEAST THREE INCHES OR FAILS TO COVER AT LEAST 90% OF THE DISTURBED SOIL BEFORE NOVEMBER 1, THEN MULCH THE AREA FOR OVER-WINTER PROTECTION AS DESCRIBED BELOW.
   B. STABILIZE THE SOIL WITH SOD:
      STABILIZE THE DISTURBED SOIL WITH PROPERLY INSTALLED SOD BY OCTOBER 1. PROPER INSTALLATION INCLUDES PINNING THE SOD ONTO THE SOIL WITH WIRE PINS, ROLLINIG THE SOD TO GUARANTEE CONTACT BETWEEN THE SOD AND UNDERLYING SOIL, AND WATERING THE SOD TO PROMOTE ROOT GROWTH INTO THE DISTURBED SOIL.
   C. STABILIZE THE SOIL WITH MULCH:
      BY NOVEMBER 15, MULCH THE DISTURBED SOIL BY SPREADING HAY OR STRAW AT A RATE OF AT LEAST 150 POUNDS PER 1000 SQUARE FEET ON THE AREA SO THAT NO SOIL IS VISIBLE THROUGH THE MULCH. IMMEDIATELY AFTER APPLYING THE MULCH, ANCHOR THE MULCH WITH PLASTIC NETTING TO PREVENT WIND FROM MOVING THE MULCH OFF THE DISTURBED SOIL. PROVIDE NETTING ON ALL SLOPES GREATER THAN 8%.
5. MAINTENANCE:
   IF AN INSPECTION DETERMINES THAT A CORRECTIVE ACTION IS REQUIRED, THE ACTION OR REPAIR SHALL BE STARTED BY THE END OF THE NEXT WORKDAY AND COMPLETED WITHIN SEVEN DAYS OR BEFORE THE NEXT STORM EVENT. MAINTENANCE MEASURES SHALL BE APPLIED AS NEEDED DURING THE ENTIRE CONSTRUCTION SEASON. ONCE A WEEK AND BEFORE AND AFTER EACH RAINFALL, SNOW STORM OR PERIOD OF THAWING AND RUNOFF, THE SITE CONTRACTOR SHALL PERFORM A VISUAL INSPECTION OF ALL INSTALLED EROSION CONTROL MEASURES AND PERFORM REPAIRS AS NEEDED TO INSURE THEIR CONTINUOUS FUNCTION. FOLLOWING THE TEMPORARY AND/OR FINAL SEEDING AND MULCHING, THE CONTRACTOR SHALL, IN THE SPRING, INSPECT AND REPAIR ANY DAMAGES AND/OR BARE SPOTS. AN ESTABLISHED VEGETATIVE COVER MEANS A MINIMUM OF 85 TO 90% OF AREAS VEGETATED WITH VIGOROUS GROWTH.

   STABILIZATION SCHEDULE BEFORE WINTER:

SEPTEMBER 15	ALL DISTURBED AREAS MUST BE SEEDED AND MULCHED. ALL SLOPES MUST BE STABILIZED, SEEDED AND MULCHED. ALL GRASS LINED DITCHES AND CHANNELS MUST BE STABILIZED WITH MULCH OR AN EROSION CONTROL BLANKET
OCTOBER 1	IF THE SLOPE IS STABILIZED WITH AN EROSION CONTROL BLANKET AND SEEDED. ALL DISTURBED AREAS TO BE PROTECTED WITH AN ANNUAL GRASS MUST BE SEEDED AT A SEEDING RATE OF 3 POUNDS PER 1000 SQUARE FEET AND MULCHED.
NOVEMBER 15	ALL STONE LINED DITCHES AND CHANNELS MUST BE CONSTRUCTED AND STABILIZED. SLOPES THAT ARE COVERED WITH RIPRAP MUST BE CONSTRUCTED BY THAT DATE.

6. DURING WINTER CONSTRUCTION PERIOD ALL SNOW SHALL BE REMOVED FROM AREAS OF SEEDING AND MULCHING PRIOR TO PLACEMENT.
7. AREAS WITHIN 75 FEET OF STREAMS, WETLANDS, AND OTHER PROTECTED NATURAL RESOURCES THAT ARE NOT STABILIZED WITH VEGETATION BY DEC. 1 SHALL BE MULCHED AND ANCHORED WITH NETTING. IF WORK CONTINUES IN THIS AREA DURING THE WINTER, A DOUBLE LINE OF SEDIMENT BARRIERS MUST BE USED.

HOUSEKEEPING

1. SPILL PREVENTION: CONTROLS MUST BE USED TO PREVENT POLLUTANTS FROM BEING DISCHARGED FROM MATERIALS 1. ON SITE, INCLUDING STORAGE PRACTICES TO MINIMIZE EXPOSURE OF THE MATERIALS TO STORMWATER, AND APPROPRIATE SPILL PREVENTION, CONTAINMENT, AND RESPONSE PLANNING AND IMPLEMENTATION.
2. GROUNDWATER PROTECTION: DURING CONSTRUCTION, LIQUID PETROLEUM PRODUCTS AND OTHER HAZARDOUS MATERIALS WITH THE POTENTIAL TO CONTAMINATE GROUNDWATER MAY NOT BE STORED OR HANDLED IN AREAS OF THE SITE DRAINING TO AN INFILTRATION AREA. AN "INFILTRATION AREA" IS ANY AREA OF THE SITE THAT BY DESIGN OR AS A RESULT OF SOILS, TOPOGRAPHY, AND OTHER RELEVANT FACTORS ACCUMULATES RUNOFF THAT INFILTRATES INTO THE SOIL. DIKES, BERMS, SUMPS, AND OTHER FORMS OF SECONDARY CONTAINMENT THAT PREVENT DISCHARGE TO GROUNDWATER MAY BE USED TO ISOLATE PORTIONS OF THE SITE FOR THE PURPOSES OF STORAGE AND HANDLING OF THESE MATERIALS.
3. FUGITIVE SEDIMENT AND DUST: ACTIONS MUST BE TAKEN TO ENSURE THAT ACTIVITIES DO NOT RESULT IN NOTICEABLE EROSION OF SOILS OR FUGITIVE DUST EMISSIONS DURING OR AFTER CONSTRUCTION. OIL MY NOT BE USED FOR DUST CONTROL. ANY OFFSITE TRACKING OF MUD OR SEDIMENT SHALL BE VACUUMED IMMEDIATELY AND PRIOR TO THE NEXT SIGNIFICANT STORM EVENT.
4. DEBRIS AND OTHER MATERIALS: LITTER, CONSTRUCTION DEBRIS, AND CHEMICALS EXPOSED TO STORMWATER MUST BE PREVENTED FROM BECOMING A POLLUTANT SOURCE.
5. TRENCH OR FOUNDATION DE-WATERING: TRENCH DE-WATERING IS THE REMOVAL OF WATER FROM TRENCHES, FOUNDATIONS, COFFER DAMS, PONDS, AND OTHER AREAS WITHIN THE CONSTRUCTION AREA THAT RETAIN WATER AFTER EXCAVATION. IN MOST CASES THE COLLECTED WATER IS HEAVILY SILTED AND HINDERS CORRECT SAFE CONSTRUCTION PRACTICES. THE COLLECTED WATER MUST BE REMOVED FROM THE PONDED AREA, EITHER THROUGH GRAVITY OR PUMPING, AND MUST BE SPREAD THROUGH NATURAL WOODED BUFFERS OR REMOVED TO AREAS THAT ARE SPECIFICALLY DESIGNED TO COLLECT THE MAXIMUM AMOUNT OF SEDIMENT POSSIBLE, LIKE A COFFERDAM SEDIMENTATION BASIN AVOID ALLOWING THE WATER TO FLOW OVER DISTURBED AREAS OF THE SITE. EQUIVALENT MEASURES MAY BE TAKEN IF APPROVED BY THE DEPARTMENT.
6. NON-STORMWATER DISCHARGES: IDENTIFY AND PREVENT CONTAMINATION BY NON-STORMWATER DISCHARGES. WHERE ALLOWED NON-STORMWATER DISCHARGES EXIST, THEY MUST BE IDENTIFIED AND STEPS SHOULD BE TAKEN TO ENSURE THE IMPLEMENTATION OF APPROPRIATE POLLUTION PREVENTION MEASURES FOR THE NON-STORMWATER COMPONENT(S) OF THE DISCHARGE. AUTHORIZED NON-STORMWATER DISCHARGES ARE:
   - DISCHARGES FROM FIREFIGHTING ACTIVITY;
   - FIRE HYDRANT FLUSHINGS;
   - VEHICLE WASHWATER IF DETERGENTS ARE NOT USED AND WASHING IS LIMITED TO THE EXTERIOR OF VEHICLES (ENGINE, UNDERCARRIAGE AND TRANSMISSION WASHING IS PROHIBITED);
   - DUST CONTROL RUNOFF IN ACCORDANCE WITH PERMIT CONDITIONS AND APPENDIX (C)(3) OF MAINE DEP 06-096 CHAPTER 500;
   - ROUTINE EXTERNAL BUILDING WASHDOWN, NOT INCLUDING SURFACE PAINT REMOVAL, THAT DOES NOT INVOLVE DETERGENTS;
   - PAVEMENT WASHWATER (WHERE SPILLS/LEAKS OF TOXIC OR HAZARDOUS MATERIALS HAVE NOT OCCURRED, UNLESS ALL SPILLED MATERIAL HAD BEEN REMOVED) IF DETERGENTS ARE NOT USED;
   - UNCONTAMINATED AIR CONDITIONING OR COMPRESSOR CONDENSATE;
   - UNCONTAMINATED GROUNDWATER OR SPRING WATER;
   - FOUNDATION OR FOOTER DRAIN-WATER WHERE FLOWS ARE NOT CONTAMINATED;
   - UNCONTAMINATED EXCAVATION DEWATERING (SEE REQUIREMENTS IN APPENDIX C(5) MAINE DEP 06-096 CHAPTER 500);
   - POTABLE WATER SOURCES INCLUDING WATERLINE FLUSHINGS; AND
   - LANDSCAPE IRRIGATION.
7. UNAUTHORIZED NON-STORMWATER DISCHARGES: THE DEPARTMENT'S APPROVAL UNDER THIS CHAPTER DOES NOT AUTHORIZE A DISCHARGE THAT IS MIXED WITH A SOURCE OF NON STORMWATER, OTHER THAN THOSE DISCHARGES IN COMPLIANCE WITH APPENDIX C(6) MAINE DEP 06-096 CHAPTER 500. SPECIFICALLY, THE DEPARTMENT'S APPROVAL DOES NOT AUTHORIZE DISCHARGES OF THE FOLLOWING:
   - WASTEWATER FROM THE WASHOUT OR CLEANOUT OF CONCRETE, STUCCO, PAINT, FORM RELEASE OILS, CURING COMPOUNDS OR OTHER CONSTRUCTION MATERIALS;
   - FUELS, OILS OR OTHER POLLUTANTS USED IN VEHICLE AND EQUIPMENT OPERATION AND MAINTENANCE;
   - SOAPS, SOLVENTS, OR DETERGENTS USED IN VEHICLE AND EQUIPMENT WASHING; AND
   - TOXIC OR HAZARDOUS SUBSTANCES FROM A SPILL OR OTHER RELEASE.
8. ADDITIONAL REQUIREMENTS: ADDITIONAL REQUIREMENTS MAY BE APPLIED ON A SITE-SPECIFIC BASIS.

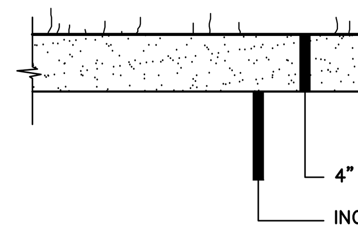

TYPICAL LOAM DETAIL

N.T.S.

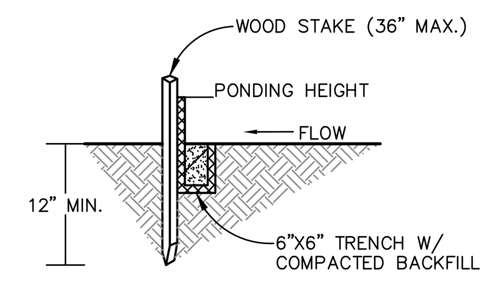

WITH TRENCHING

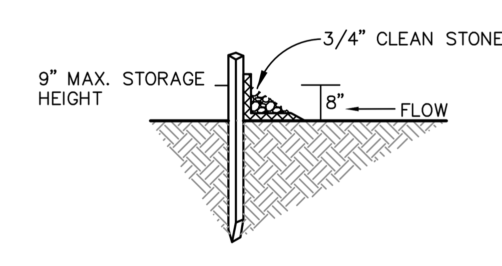

WITHOUT TRENCHING

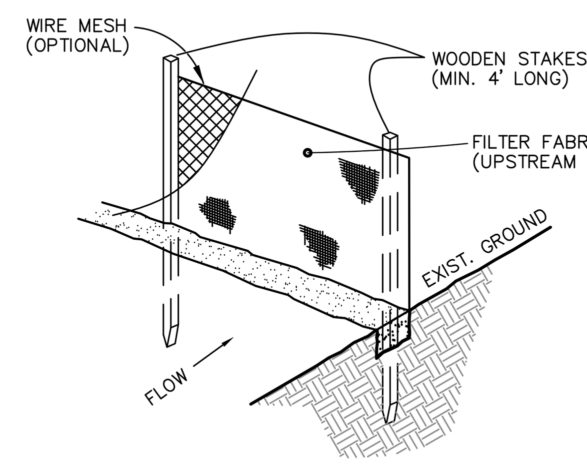

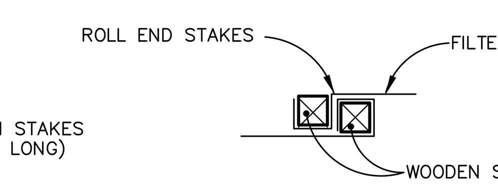

END POST DETAIL

NTS

1. KEY FABRIC IN A 6"X6" TRENCH W/ BACKFILL.
2. SILT FENCE SHALL BE A 3' FENCE OF 120LB/M (W/ REINF. BACK OF 6" WIRE MESH, POSTS 6' O.C. MAX) OR 200LB/M (W/ NO REINF. POSTS 6' O.C. MAX)

SILT FENCE DETAIL

N.T.S.

PLACE BARRIER ALONG RELATIVELY LEVEL CONTOUR.
ECM BERM PROHIBITED AT THE BASE OF SLOPES > 8% OR WHERE THERE IS FLOWING WATER.
SEE MAINE EROSION AND SEDIMENT CONTROL FIELD GUIDE FOR CONTRACTORS FOR INSTALLATION INSTRUCTIONS.

EROSION CONTROL MIX SHOULD CONTAIN A WELL GRADED MIXTURE OF PARTICLE SIZES AND MAY CONTAIN ROCKS LESS THAN 4" IN DIAMETER. ECM SHOULD BE FREE OF REFUSE, PHYSICAL CONTAMINATES, AND MATERIAL TOXIC TO PLANT GROWTH.

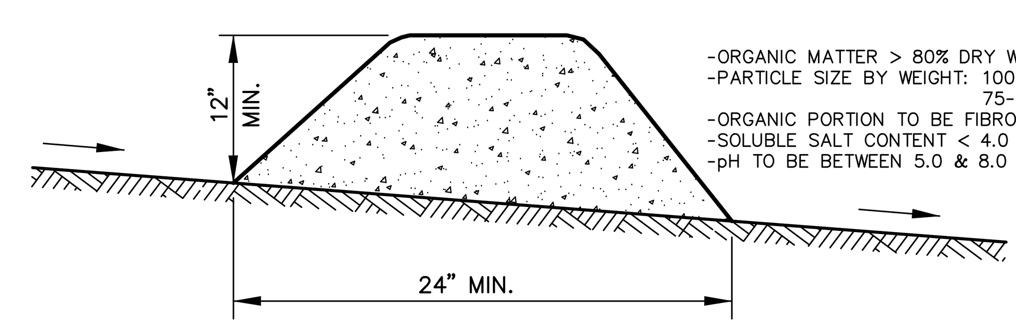

-ORGANIC MATTER > 80% DRY WEIGHT
-PARTICLE SIZE BY WEIGHT: 100% PASSING 6" SCREEN
75-85% PASSING 0.75" SCREEN
-ORGANIC PORTION TO BE FIBROUS & ELONGATED
-SOLUBLE SALT CONTENT < 4.0 MMOHS/CM.
-pH TO BE BETWEEN 5.0 & 8.0

EROSION CONTROL MIX BERM

NTS

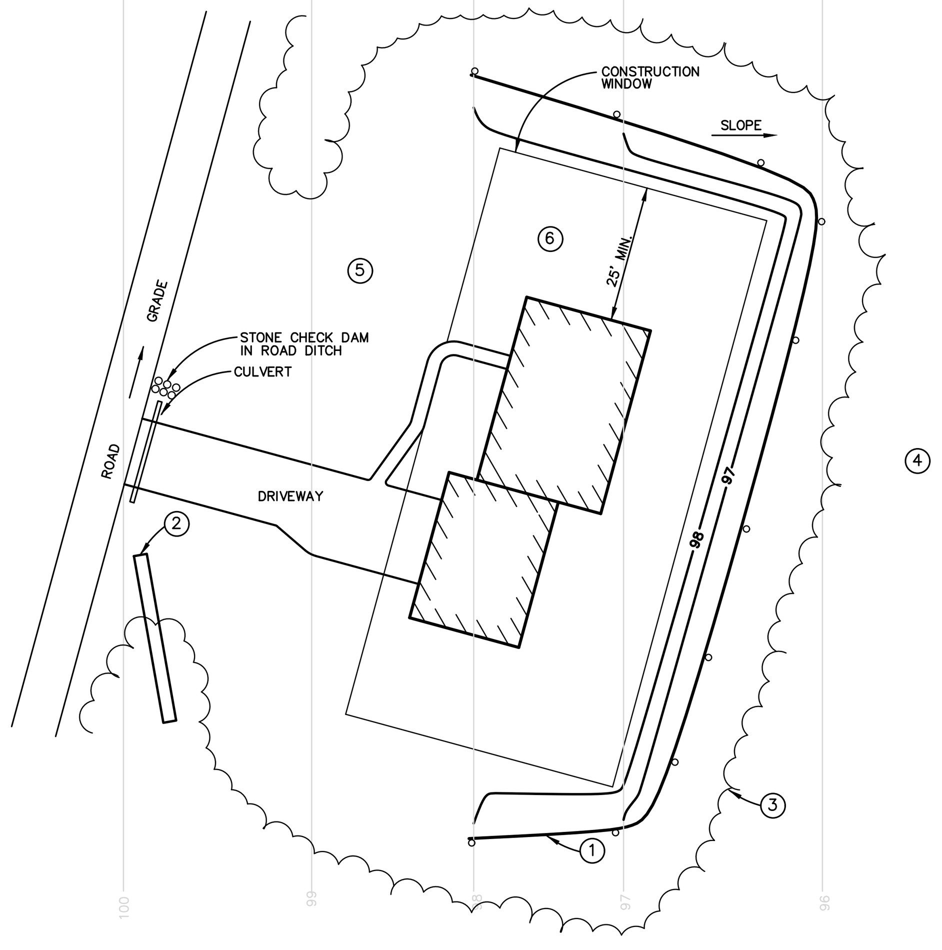

HOUSE SITE, TYP.

NOT TO SCALE

INSTALLATION

1. INSTALL SEDIMENT BARRIERS ON YOUR SITE BEFORE DISTURBING SOILS. SEE THE "SEDIMENT BARRIERS" MEASURE FOR DETAILS ON INSTALLATION AND MAINTENANCE.
2. CONSTRUCT A DIVERSION DITCH TO KEEP UPSLOPE RUNOFF OUT OF WORK AREA.
3. MARK CLEARING LIMITS ON THE SITE TO KEEP EQUIPMENT OUT OF AREAS WITH STEEP SLOPES, CHANNELIZED FLOW, OR ADJACENT SURFACE WATERS AND WETLANDS.
4. PRESERVE BUFFERS BETWEEN THE WORK AREA AND ANY DOWNSTREAM SURFACE WATERS AND WETLANDS. SEE THE "BUFFERS" MEASURE FOR BUFFER PRESERVATION.
5. USE TEMPORARY MULCH AND RYE-SEED TO PROTECT DISTURBED SOILS OUTSIDE THE ACTIVE CONSTRUCTION AREA. SEE THE "MULCHING" MEASURE AND "VEGETATION" MEASURE FOR DETAILS AND SPECIFICATIONS FOR THESE CONTROLS.
6. PERMANENTLY SEED AREAS NOT TO BE PAVED WITHIN SEVEN DAYS OF COMPLETING FINAL GRADING, SEE "VEGETATION" MEASURE FOR INFORMATION ON PROPER SEEDING.

MAINTENANCE

PLEASE REFER TO THE OPERATIONS AND MAINTENANCE PLAN FOR THIS PROJECT FOR A DETAILED OUTLINE OF ALL POST CONSTRUCTION MAINTENANCE REQUIREMENTS.

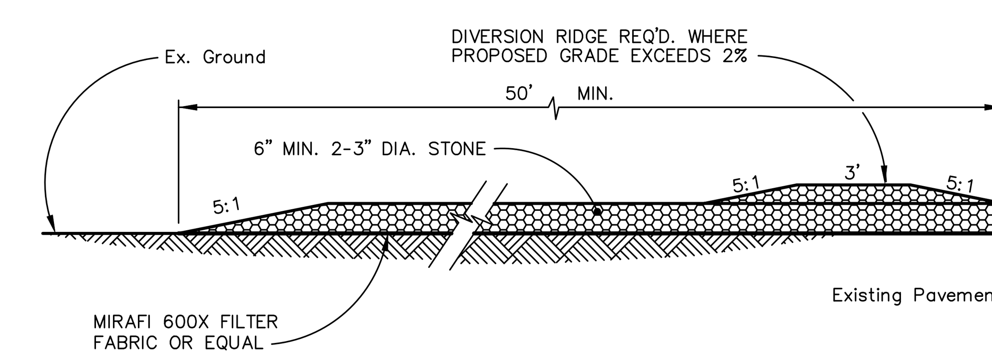

PROFILE

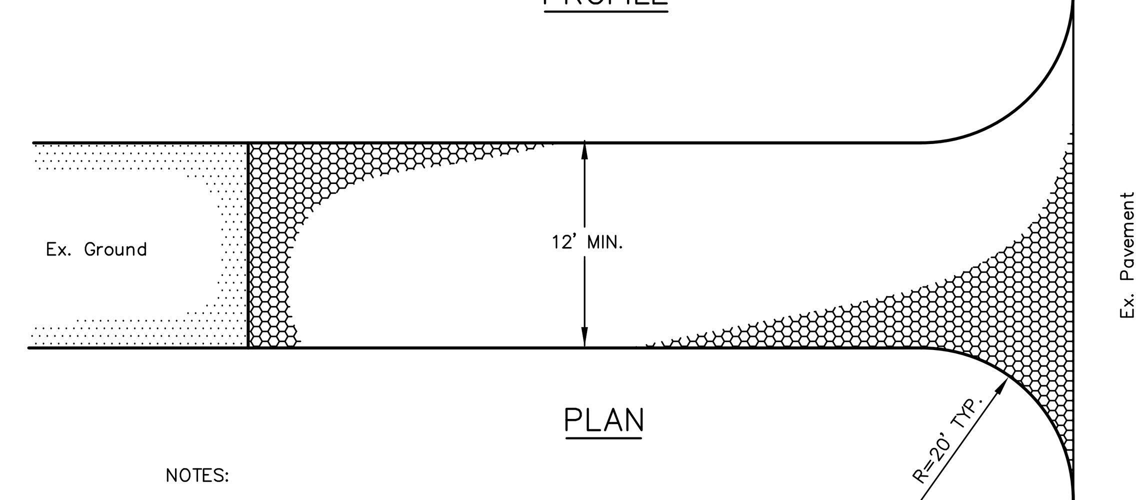

PLAN

NOTES:

THE ENTRANCE SHALL BE MAINTAINED IN A CONDITION THAT WILL PREVENT TRACKING OR FLOWING OF SEDIMENT ONTO PUBLIC RIGHT OF WAYS. THIS MAY REQUIRE TOP DRESSING, REPAIR AND/OR CLEANOUT OF ANY MEASURES USED TO TRAP SEDIMENT.

WHEN NECESSARY, WHEELS SHALL BE CLEANED PRIOR TO ENTRANCE ONTO PUBLIC RIGHT OF WAY.

WHEN WASHING IS REQUIRED, IT SHALL BE DONE ON AN AREA STABILIZED WITH CRUSHED STONE THAT DRAINS INTO AN APPROVED SEDIMENT TRAP OR SEDIMENT BASIN.

STABILIZED CONSTRUCTION ENTRANCE

NTS

REVISION		
NO.	DATE	DESCRIPTION
1	9/29/21	Submitted Preliminary Subdivision to Town

STATE OF MAINE · ANDREW S. MORRELL · No. 13285 · LICENSED PROFESSIONAL ENGINEER

BH2M
Berry, Huff, McDonald, Milligan Inc.
Engineers, Surveyors
28 State Street
Gorham, Maine 04038
Tel. (207) 839-2771
Fax (207) 839-8250

FOR
Bill Ham
142 Darbick Terrace
Hollis, Maine

STANDARD DETAILS

OLD STANDISH ROAD SUBDIVISION

OLD STANDISH ROAD
BUXTON, MAINE

DESIGNED	DATE
A. Morrell	Sept. 2021
DRAWN	SCALE
T. Taggett	As Shown
CHECKED	JOB. NO.
R. Libby, Jr.	20179

SHEET

2

REPRODUCTION OR REUSE OF THIS DOCUMENT WITHOUT THE EXPRESSED WRITTEN CONSENT OF BH2M INC. IS PROHIBITED

G:\2020\20179\Details.dwg, 9/29/2021 12:36:45 PM